Basin/Tvättfat 183W1

Rear Elevation

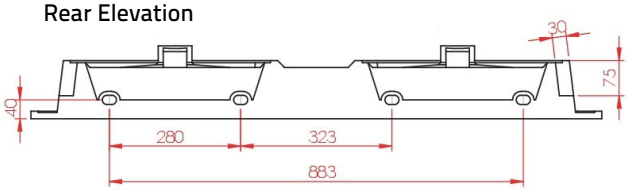

Top View

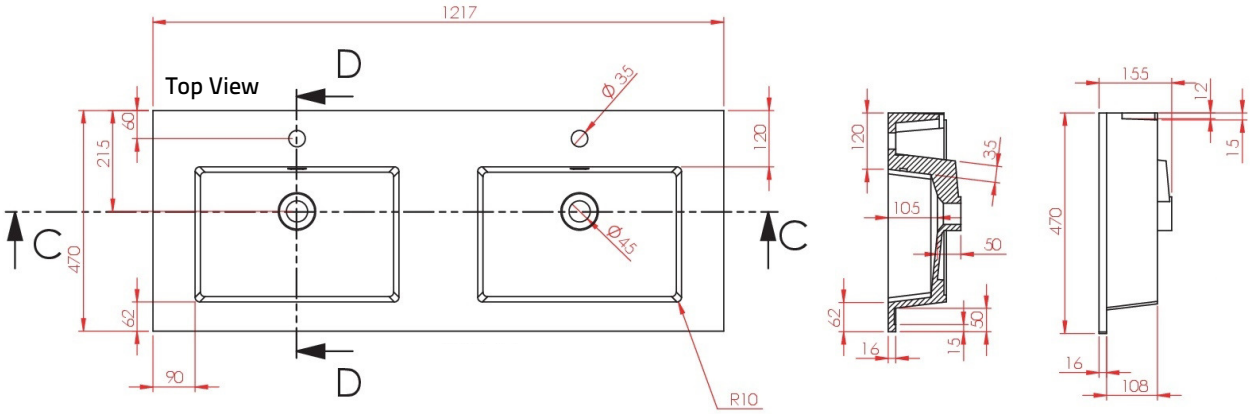

Front View

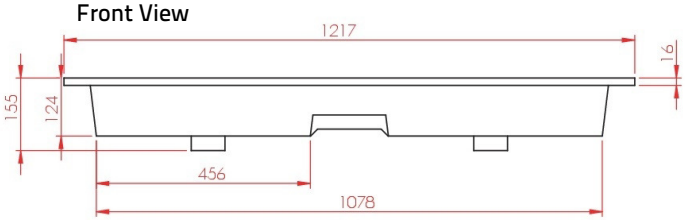

Section mm

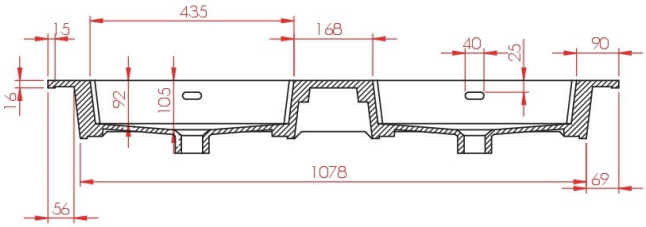

View from Below

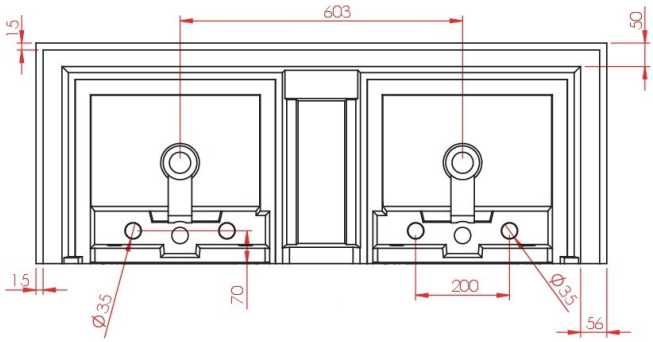

Miller
FINE BATHROOM INTERIORS